1.5 Series/Group

STANDARD PRODUCT DIMENSIONS

BAP1.5-Q0-[D]-[2.0]-C0-E0-YF1-[P100]

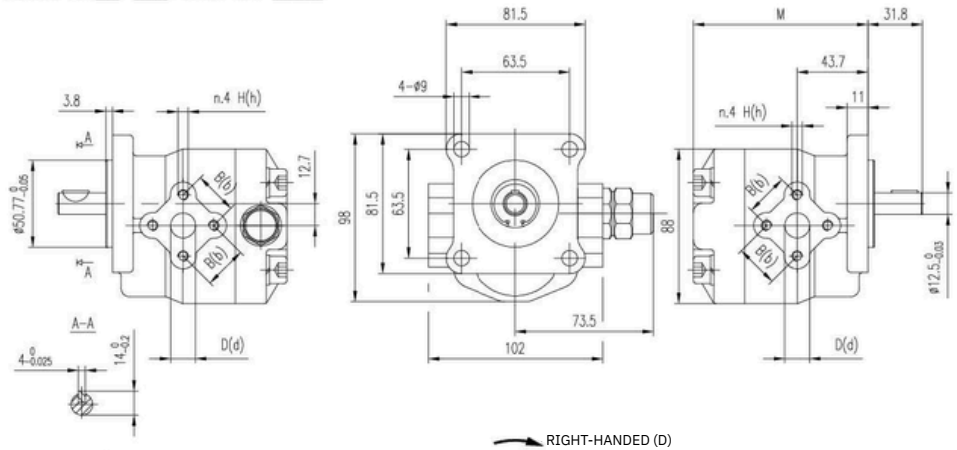

Pressure relief valve.
Discharge returned to suction.
P=20...250 bar.

M6 10÷1 Nm

Displacement	max pressure			Max. speed	Min. speed	Weight	Dimensions	Oil port code	INLET			OUTLET		
	P1	P2	P3				M		B	D	H	b	d	h
(cm³/rev)	bar	bar	bar	(r/min)	(r/min)	Kg	mm		mm	mm		mm	mm	
2	210	230	250	5000	900	1.55	96.7	E0	25.2	14.5	M6	25.2	14.5	M6
3	210	230	250	5000	850	1.57	96.7	E0	25.2	14.5	M6	25.2	14.5	M6
4	210	230	250	4500	800	1.6	96.7	E0	25.2	14.5	M6	25.2	14.5	M6
5	210	230	250	4000	800	1.63	96.7	E0	25.2	14.5	M6	25.2	14.5	M6
6	210	230	250	3500	700	1.65	99.7	E0	25.2	14.5	M6	25.2	14.5	M6
8	210	230	250	3000	600	1.7	99.7	E0	25.2	14.5	M6	25.2	14.5	M6
9	180	200	220	2500	550	1.72	102.7	E0	25.2	14.5	M6	25.2	14.5	M6
11	180	200	220	2000	500	1.77	105.7	E0	25.2	14.5	M6	25.2	14.5	M6
12	180	200	220	2000	500	1.82	105.7	E0	25.2	14.5	M6	25.2	14.5	M6

2 Series/Group

ORDERING CODE RULES

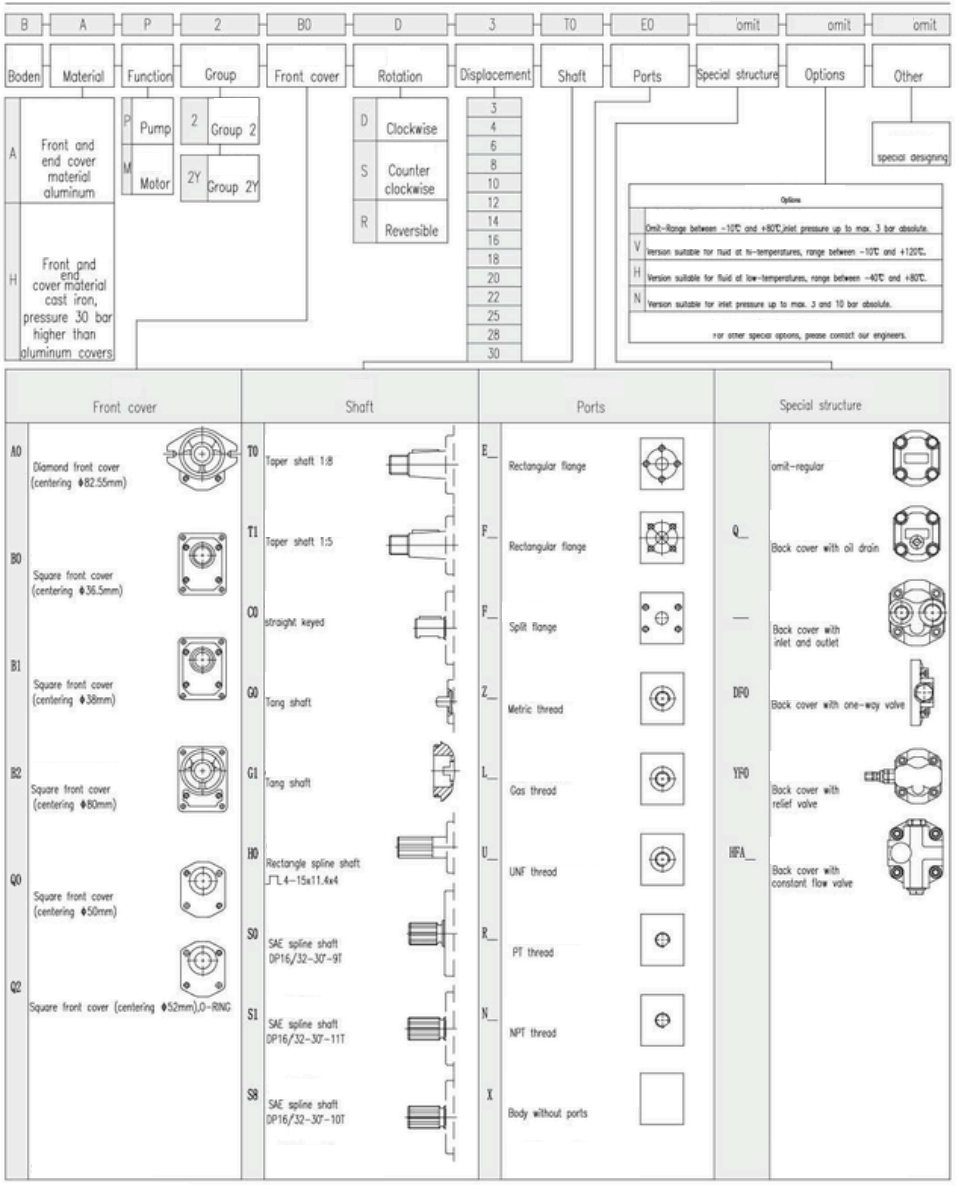

If you need other models, please see the details page or contact our engineers.

STANDARD PRODUCT OVERVIEW

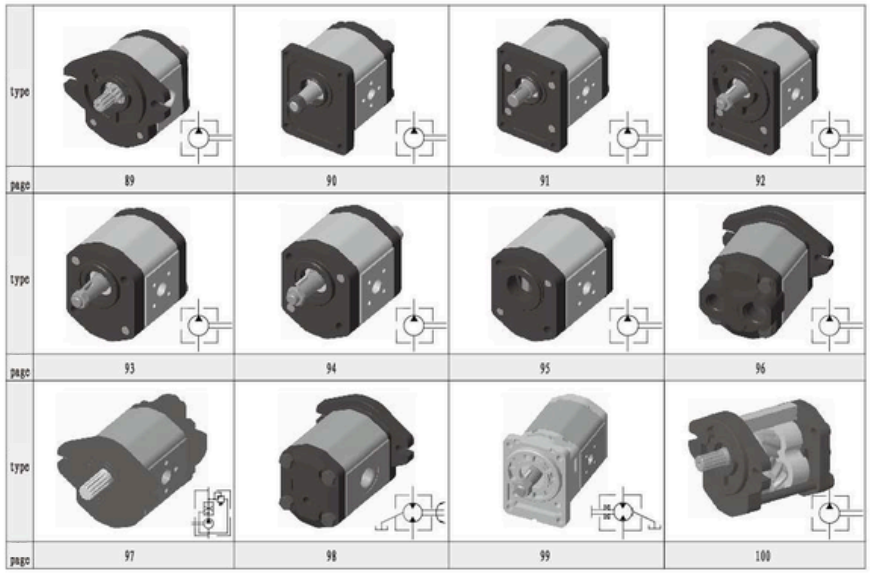

GROUP 2 DISPLACEMENT PARAMETER TABLE

Displacement	V	cm^3/rev	3	4	6	8	10	12	14	16	18	20	22	25	28	30
Suction absolute pressure	Pe	bar	0.7...3													
Max. continuous pressure	P1		270						250			220		200	180	160
Max. intermittent pressure	P2		285						265			235		215	190	170
Max. peak pressure	P3		300						280			250		230	200	180
Min. speed	n_{min}	r/min	800	600			500					400				
Max. speed	n_{max}		4000			3500			3200				3000		2500	
Volumetric efficiency	η_v	%	>91				>92				>93				>95	

GROUP 2Y DISPLACEMENT PARAMETER TABLE

Displacement	V	cm^3/rev	6	8	10	12	14	16	18	20	22	25	28	30
Suction absolute pressure	Pe	bar	0.7...3											
Max. continuous pressure	P1		270				250			220		200	180	160
Max. intermittent pressure	P2		285				265			235		215	190	170
Max. peak pressure	P3		300				280			250		230	200	180
Min. speed	n_{min}	r/min	250	200					150					
Max. speed	n_{max}		3500				3200				3000		2500	
Volumetric efficiency	η_v	%	>93			>95				>96				

2 Series/Group

FLOW PERFORMANCE CURVE TABLE

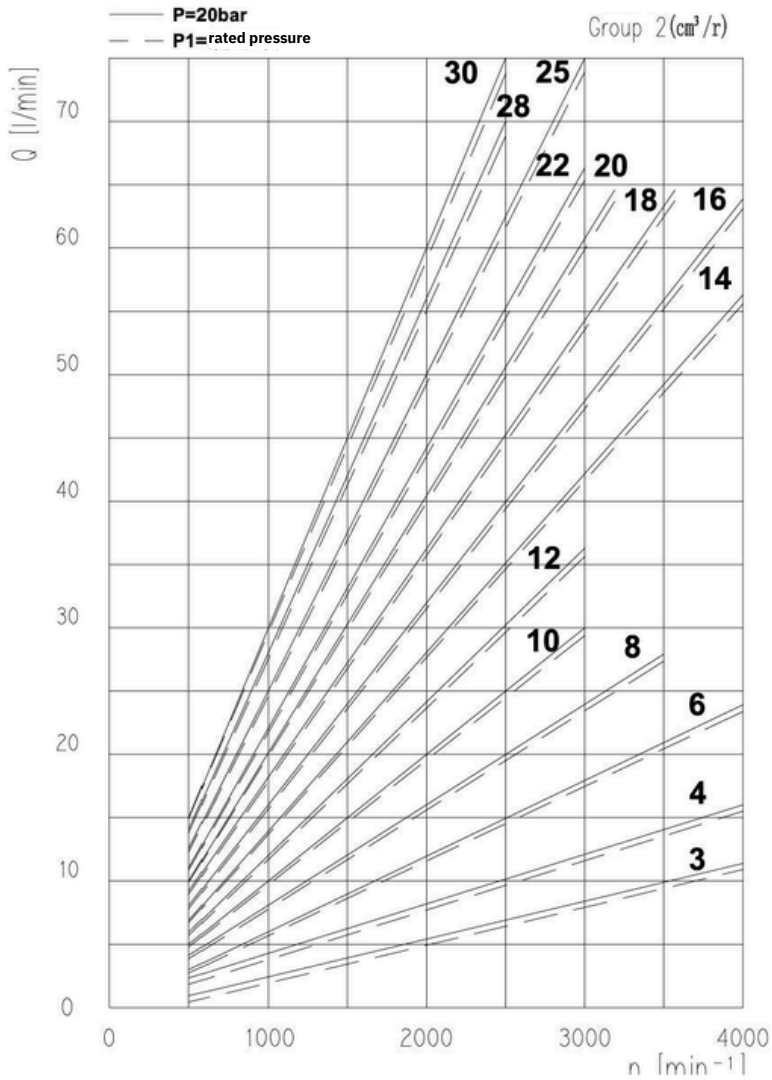

POWER PERFORMANCE CURVE TABLE

V=3cm³/r

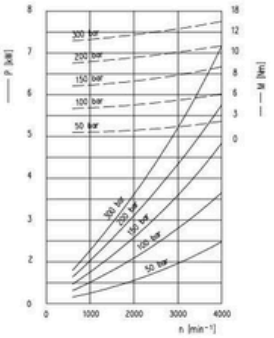

V=4cm³/r

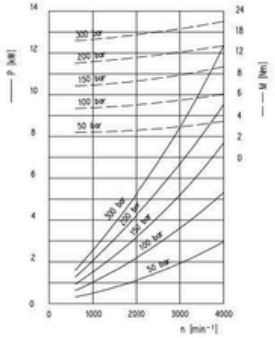

V=6cm³/r

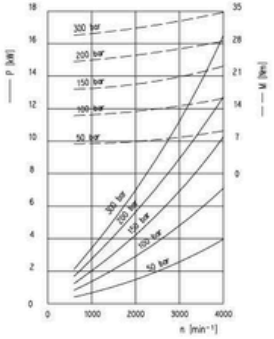

V=8cm³/r

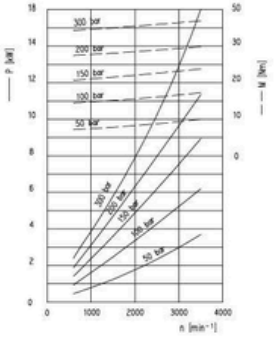

V=10cm³/r

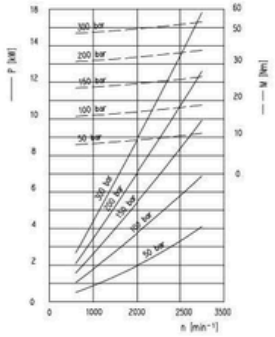

V=12cm³/r

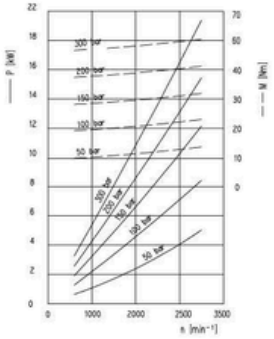

V=14cm³/r

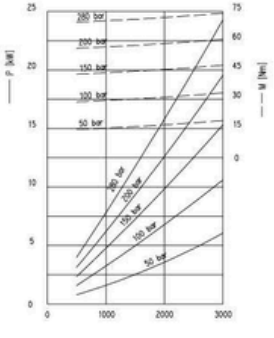

V=16cm³/r

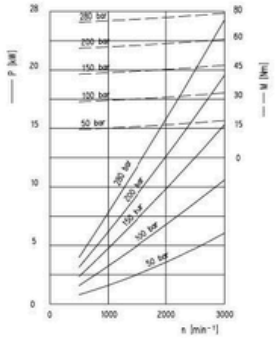

V=18cm³/r

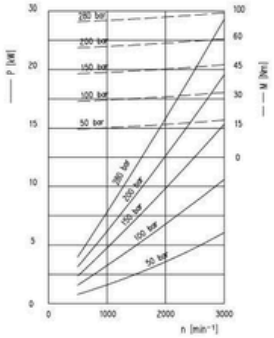

winner HYDRO DYNAMICS

2 Series/Group

POWER PERFORMANCE CURVE TABLE

V=20cm³/r

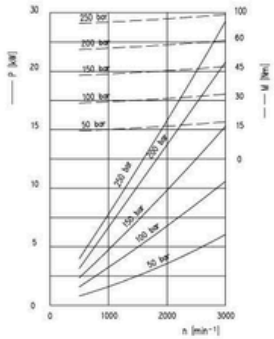

V=22cm³/r

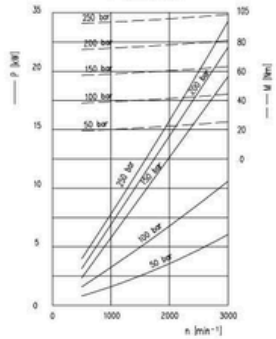

V=25cm³/r

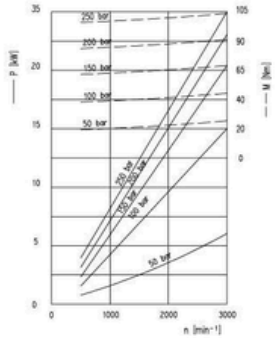

V=28cm³/r

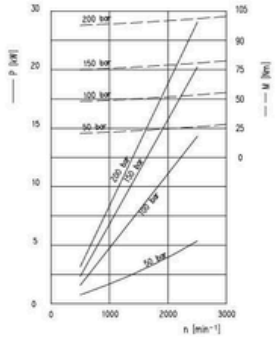

V=30cm³/r

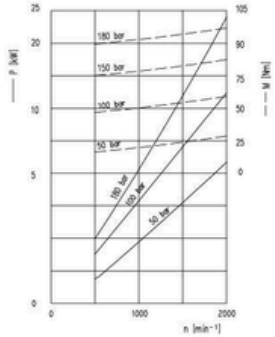

NOISE CURVE TABLE

The noise level depends on the speed and pressure range;This pressure range is between 10 bar and pressure value P1.

Oil data: V = 32mm²/s, θ=50℃.

The sound pressure level obtained by calculating the noise value measured from the sound absorption measuring room meets the requirements of Chapter 26 of DIN 45635.

Distance between measuring sensor and hydraulic pump: 1m.

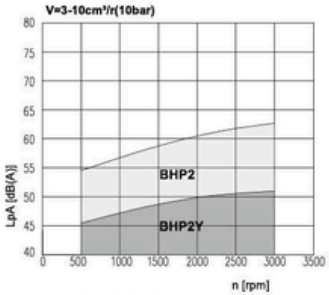

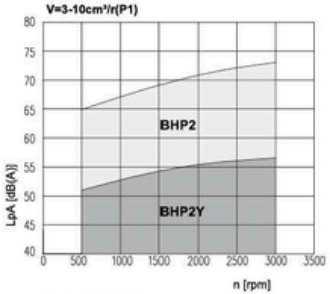

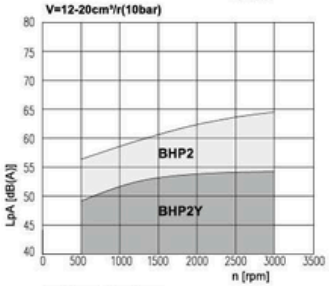

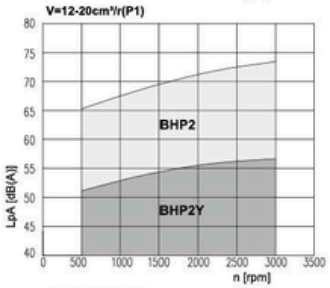

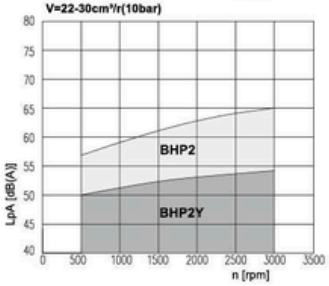

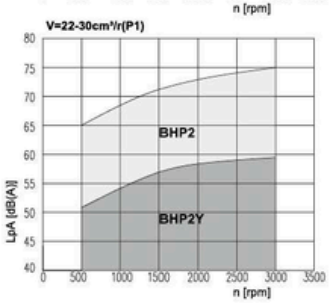

2 Series/Group

FRONT COVER

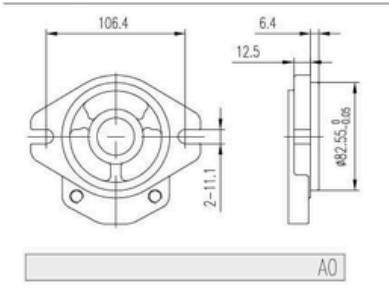

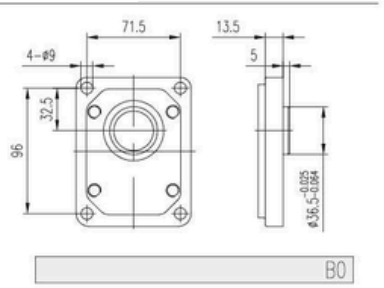

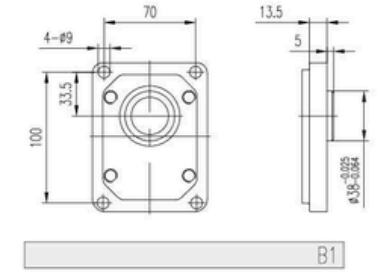

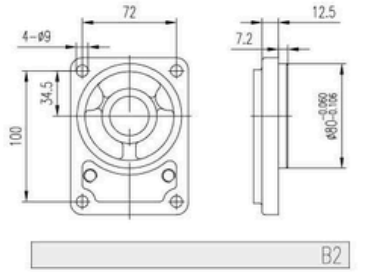

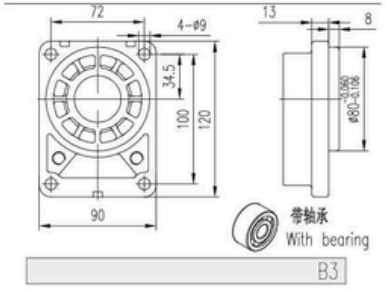

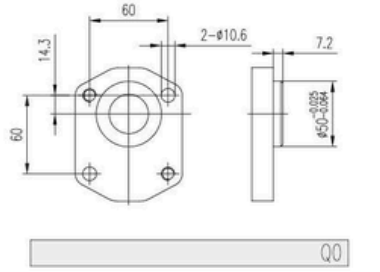

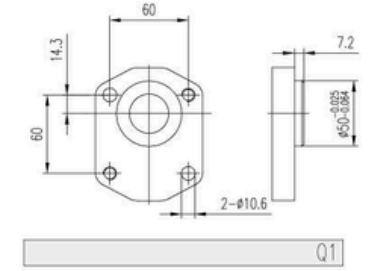

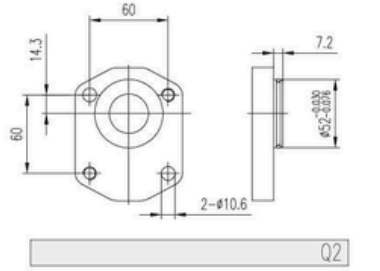

SHAFT EXTENSIONS

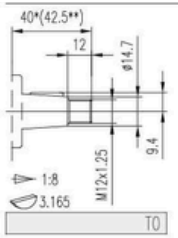

T0

Max.Torque 200 Nm

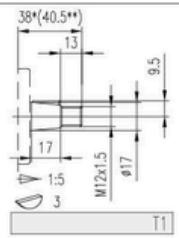

T1

Max.Torque 180 Nm

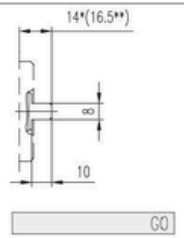

G0

Max.Torque 100 Nm

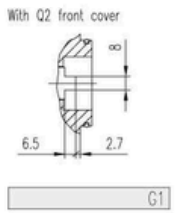

G1

Max.Torque 100 Nm



C0

Max.Torque 140 Nm



C1

Max.Torque 160 Nm

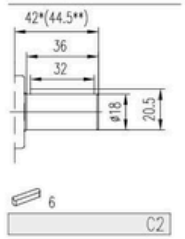

C2

Max.Torque 150 Nm

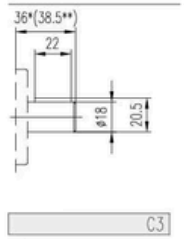

C3

Max.Torque 150 Nm

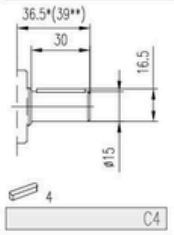

C4

Max.Torque 135 Nm

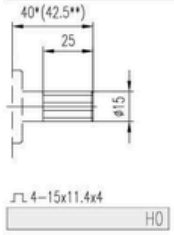

H0

Max.Torque 185 Nm

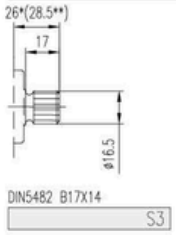

S3

Max.Torque 150 Nm

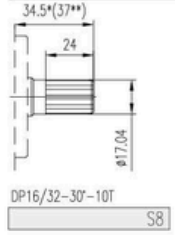

S8

Max.Torque 190 Nm

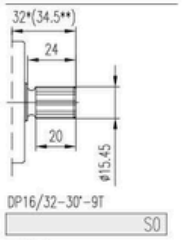

S0

Max.Torque 185 Nm

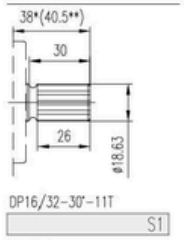

S1

Max.Torque 200 Nm

Dimension with front cover A□/B□

Dimension with front cover Q□

2 Series/Group

PUMP BODY OIL PORTS

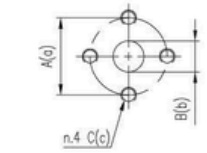

E0/E1/E2

PORTS CODE	Displacement	INLET			OUTLET		
	(cm³/rev)	A	B	C	a	b	c
E0	3...8	30	13	M6	30	13	M6
E1	10...22	40	20	M8	30	13	M6
E2	25...30	40	22	M6	30	13	M6

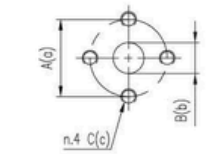

E3

PORTS CODE	Displacement	INLET			OUTLET		
	(cm³/rev)	A	B	C	a	b	c
E3	3...8	38	14	M8	38	10	M8
E3	10...22	38	18	M8	38	15	M8
E3	25...30	38	20	M8	38	15	M8

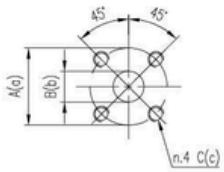

F0/F1/F13

PORTS CODE	Displacement	INLET			OUTLET		
	(cm³/rev)	A	B	C	a	b	c
F0	3...8	40	15	M6	35	15	M6
F1	10...30	40	20	M6	35	15	M6
F13	10...30	40	20	M6	40	20	M6

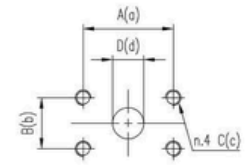

F2/F3/F4

PORTS CODE	Displacement	INLET				OUTLET			
	(cm³/rev)	A	B	C	D	a	b	c	d
F2	3...16	38.1	17.48	5/16-18UNC	13	38.1	17.48	5/16-18UNC	13
F3	18...20	47.63	22.23	3/8-16UNC	20	38.1	17.48	5/16-18UNC	13
F4	22...30	47.63	22.23	3/8-16UNC	20	47.63	22.23	3/8-16UNC	20

PUMP BODY OIL PORTS

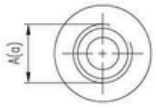

L0/L1

PORTS CODE	Displacement	INLET	OUTLET
	(cm³/rev)	A	a
L0	3...6	G1/2	G1/2
L1	8...30	G3/4	G1/2

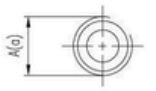

R0/R1/R2

PORTS CODE	Displacement	INLET	OUTLET
	(cm³/rev)	A	a
R0	3...12	PT1/2	PT1/2
R1	14...25	PT3/4	PT1/2
R2	28...30	PT 1	PT3/4

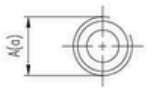

Z0/Z1/Z3

PORTS CODE	Displacement	INLET	OUTLET
	(cm³/rev)	A	a
Z0	3...12	M14X1.5	M14X1.5
Z1	14...25	M20X1.5	M18X1.5
Z3	28...30	M24X1.5	M22X1.5

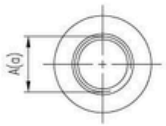

O-ring

U0/U1

PORTS CODE	Displacement	INLET	OUTLET
	(cm³/rev)	A	a
U0	3...28	1 1/16-12 UNF	7/8-14 UNF
U1	30	1 5/16-12 UNF	7/8-14 UNF

2 Series/Group

SPECIAL STRUCTURE

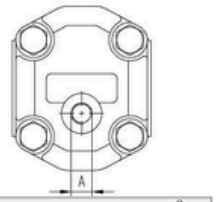

Q_

CODE	oil drain
	A
Q1	G1/4
Q2	9/16-18UNF

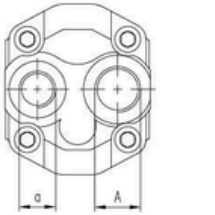

L0/R0/U0

CODE	INLET	OUTLET
	A	a
L0	G1/2	G1/2
R0	PT1/2	PT1/2
U0	1 1/16-12UNF	7/8-14UNF

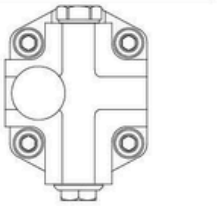

HFA_

CODE	LET	Oil port position
HFAC19T	M18*1.5	Same side of oil inlet
HFAC19F	M18*1.5	Opposite side of oil inlet

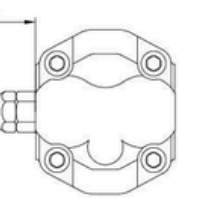

YF0

CODE	Pressure regulating range of overflow valve
YF0	20...250(bar)

STANDARD PRODUCT DIMENSIONS

BHP2-A0-[D]-[3]-S0-[U0]

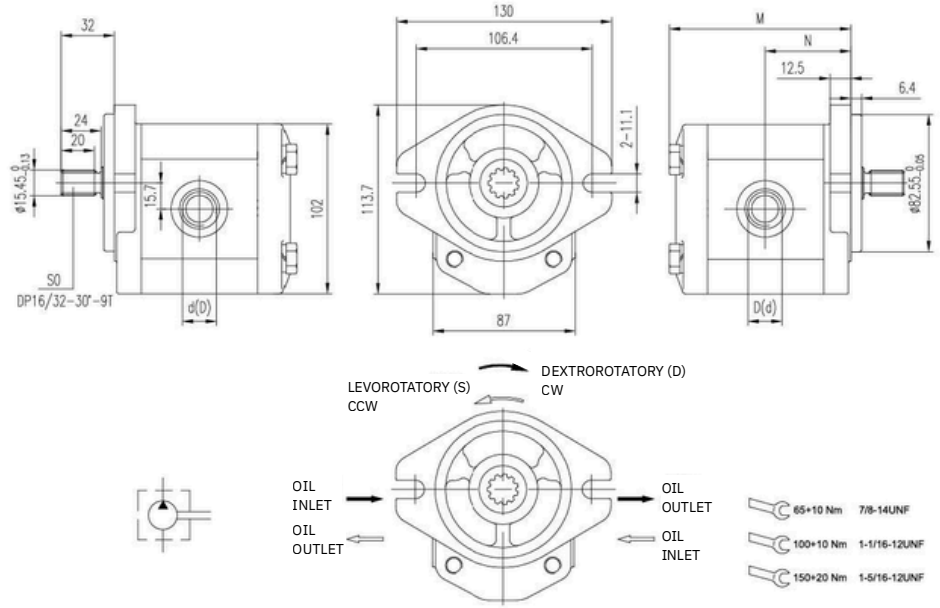

Displacement	Max pressure			Max. speed	Min. speed	Weight	Dimensions		Oil port code	INLET	OUTLET
	P1	P2	P3				M	L		D	d
(cm³/rev)	bar	bar	bar	(r/min)	(r/min)	Kg	mm	mm			
3	270	285	300	4000	800	3.35	91.1	43.6	U0	1 1/16-12UNF	7/8-14UNF
4	270	285	300	4000	600	3.4	92.7	44.4	U0	1 1/16-12UNF	7/8-14UNF
6	270	285	300	4000	600	3.5	96	46	U0	1 1/16-12UNF	7/8-14UNF
8	270	285	300	3500	500	3.6	99.3	47.7	U0	1 1/16-12UNF	7/8-14UNF
10	270	285	300	3500	500	3.7	102.6	49.3	U0	1 1/16-12UNF	7/8-14UNF
12	270	285	300	3500	500	3.8	105.9	51	U0	1 1/16-12UNF	7/8-14UNF
14	250	265	280	3500	500	3.9	109.3	52.7	U0	1 1/16-12UNF	7/8-14UNF
16	250	265	280	3500	500	4.0	112.7	54.4	U0	1 1/16-12UNF	7/8-14UNF
18	250	265	280	3200	400	4.1	116	56	U0	1 1/16-12UNF	7/8-14UNF
20	220	235	250	3200	400	4.2	119.3	57.7	U0	1 1/16-12UNF	7/8-14UNF
22	220	235	250	3000	400	4.3	122.6	59.3	U0	1 1/16-12UNF	7/8-14UNF
25	200	215	230	3000	400	4.45	127.6	61.8	U0	1 1/16-12UNF	7/8-14UNF
28	180	190	200	2500	400	4.6	132.6	64.3	U0	1 1/16-12UNF	7/8-14UNF
30	160	170	180	2500	400	4.7	135.9	66	U1	1 5/16-12UNF	7/8-14UNF

2 Series/Group

STANDARD PRODUCT DIMENSIONS

BHP2-B0-[D]-[3]-T0-[E0]

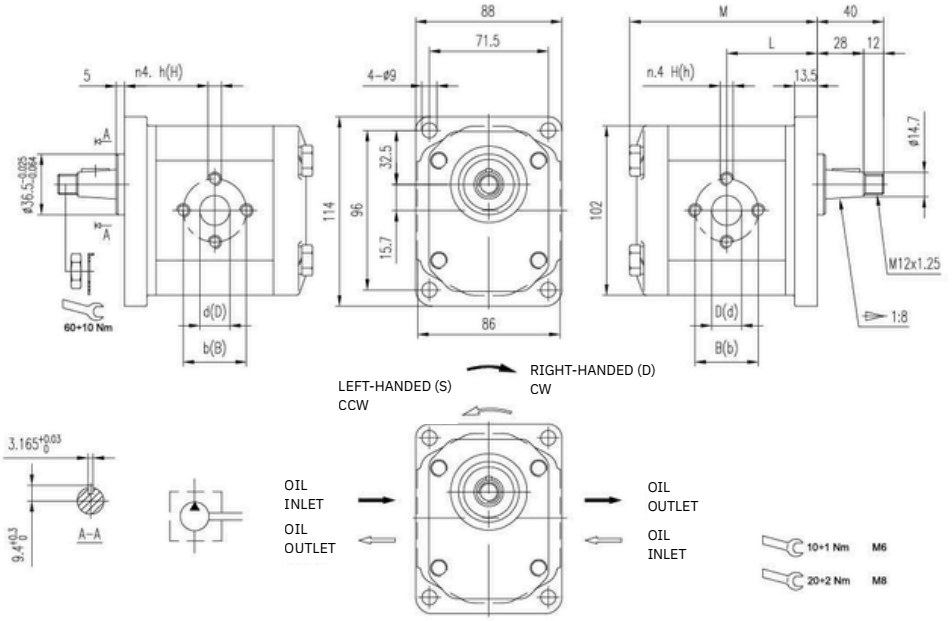

Displacement	Max pressure			Max. speed	Min. speed	Weight	Dimensions		Oil port code	INLET			OUTLET		
	P1	P2	P3				M	L		B	D	H	b	d	h
(cm³/rev)	bar	bar	bar	(r/min)	(r/min)	Kg	mm	mm		mm	mm		mm	mm	
3	270	285	300	4000	800	3.35	91.1	43.6	E0	30	13	M6	30	13	M6
4	270	285	300	4000	600	3.4	92.7	44.4	E0	30	13	M6	30	13	M6
6	270	285	300	4000	600	3.5	96	46	E0	30	13	M6	30	13	M6
8	270	285	300	3500	500	3.6	99.3	47.7	E0	30	13	M6	30	13	M6
10	270	285	300	3500	500	3.7	102.6	49.3	E1	40	20	M8	30	13	M6
12	270	285	300	3500	500	3.8	105.9	51	E1	40	20	M8	30	13	M6
14	250	265	280	3500	500	3.9	109.3	52.7	E1	40	20	M8	30	13	M6
16	250	265	280	3500	500	4.0	112.7	54.4	E1	40	20	M8	30	13	M6
18	250	265	280	3200	400	4.1	116	56	E1	40	20	M8	30	13	M6
20	220	235	250	3200	400	4.2	119.3	57.7	E1	40	20	M8	30	13	M6
22	220	235	250	3000	400	4.3	122.6	59.3	E1	40	20	M8	30	13	M6
25	200	215	230	3000	400	4.45	127.6	61.8	E2	40	22	M8	30	13	M6
28	180	190	200	2500	400	4.6	132.6	64.3	E2	40	22	M8	30	13	M6
30	160	170	180	2500	400	4.7	135.9	66	E2	40	22	M8	30	13	M6

STANDARD PRODUCT DIMENSIONS

BHP2-B1-[D]-[3]-C2-[Z0]

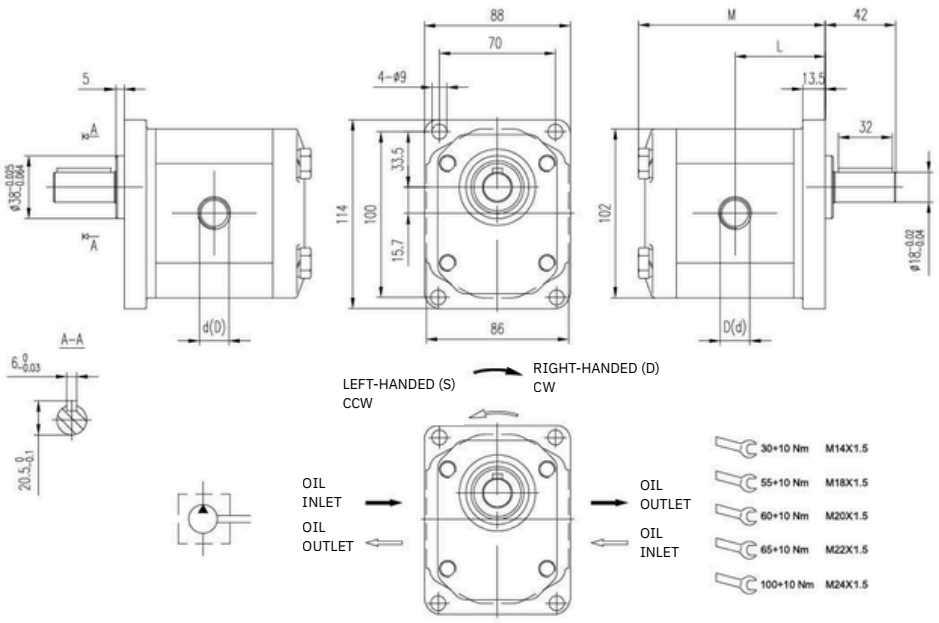

Displacement	Max pressure			Maximum speed	Min. speed	Weight	Dimensions		Oil port code	INLET	OUTLET
	P1	P2	P3				M	L		D	d
(cm³/rev)	bar	bar	bar	(r/min)	(r/min)	Kg	mm	mm			
3	270	285	300	4000	800	3.35	91.1	43.6	Z0	M14X1.5	M14X1.5
4	270	285	300	4000	600	3.4	92.7	44.4	Z0	M14X1.5	M14X1.5
6	270	285	300	4000	600	3.5	96	46	Z1	M20X1.5	M18X1.5
8	270	285	300	3500	500	3.6	99.3	47.7	Z1	M20X1.5	M18X1.5
10	270	285	300	3500	500	3.7	102.6	49.3	Z1	M20X1.5	M18X1.5
12	270	285	300	3500	500	3.8	105.9	51	Z1	M20X1.5	M18X1.5
14	250	265	280	3500	500	3.9	109.3	52.7	Z1	M20X1.5	M18X1.5
16	250	265	280	3500	500	4.0	112.7	54.4	Z1	M20X1.5	M18X1.5
18	250	265	280	3200	400	4.1	116	56	Z1	M20X1.5	M18X1.5
20	220	235	250	3200	400	4.2	119.3	57.7	Z3	M24X1.5	M22X1.5
22	220	235	250	3000	400	4.3	122.6	59.3	Z3	M24X1.5	M22X1.5
25	200	215	230	3000	400	4.45	127.6	61.8	Z3	M24X1.5	M22X1.5
28	180	190	200	2500	400	4.6	132.6	64.3	Z3	M24X1.5	M22X1.5
30	160	170	180	2500	400	4.7	135.9	66	Z3	M24X1.5	M22X1.5

2 Series/Group

STANDARD PRODUCT DIMENSIONS

BHP2-B2-[D]-[3]-T1-[F0]

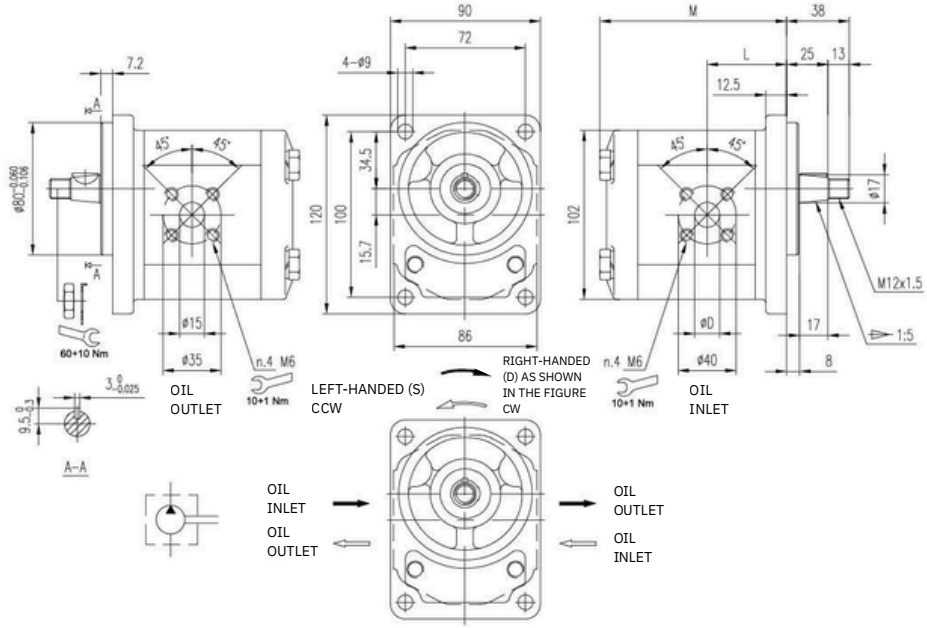

Displacement	Max pressure			Max. speed	Min. speed	Weight	Dimensions		Oil port code	INLET
	P1	P2	P3				M	L		D
(cm³/rev)	bar	bar	bar	(r/min)	(r/min)	Kg	mm	mm		mm
3	270	285	300	4000	800	3.35	91.1	39.9	F0	15
4	270	285	300	4000	600	3.4	92.7	39.9	F0	15
6	270	285	300	4000	600	3.5	96	41.1	F0	15
8	270	285	300	3500	500	3.6	99.3	43.2	F0	15
10	270	285	300	3500	500	3.7	102.6	43.7	F1	20
12	270	285	300	3500	500	3.8	105.9	47.5	F1	20
14	250	265	280	3500	500	3.9	109.3	47.5	F1	20
16	250	265	280	3500	500	4.0	112.7	47.5	F1	20
18	250	265	280	3200	400	4.1	116	47.5	F1	20
20	220	235	250	3200	400	4.2	119.3	47.5	F1	20
22	220	235	250	3000	400	4.3	122.6	55.1	F1	20
25	200	215	230	3000	400	4.45	127.6	61.8	F1	20
28	180	190	200	2500	400	4.6	132.6	64.3	F1	20
30	160	170	180	2500	400	4.7	135.9	66	F1	20

STANDARD PRODUCT DIMENSIONS

BHP2-Q0-D-3-T1-F0

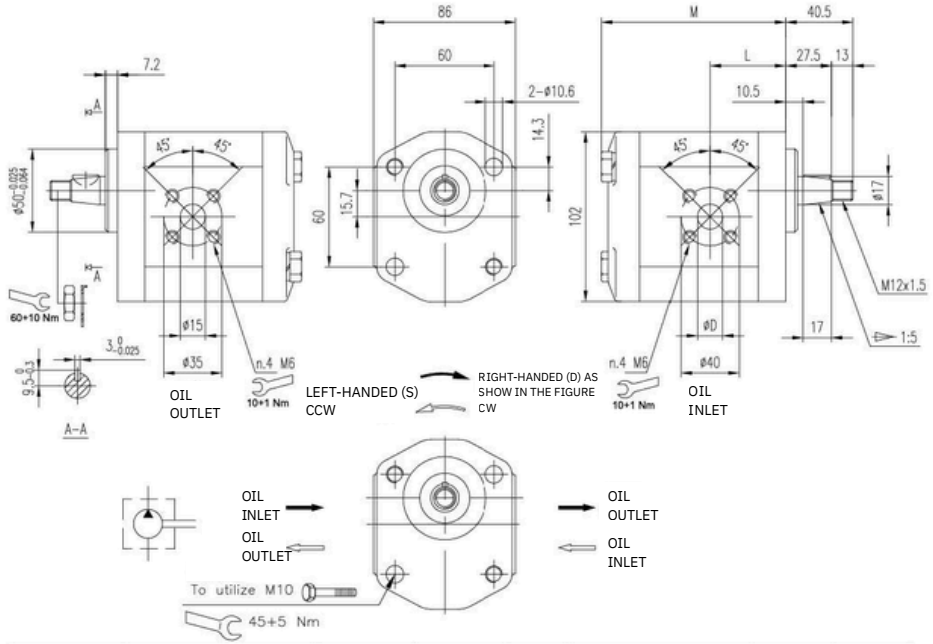

Displacement	Max pressure			Max. speed	Min. speed	Weight	Dimensions		Oil port code	INLET
	P1	P2	P3				M	L		D
(cm³/rev)	bar	bar	bar	(r/min)	(r/min)	Kg	mm	mm		mm
3	270	285	300	4000	800	3.35	88.6	37.4	F0	15
4	270	285	300	4000	600	3.4	90.2	37.4	F0	15
6	270	285	300	4000	600	3.5	93.5	38.6	F0	15
8	270	285	300	3500	500	3.6	96.8	40.7	F0	15
10	270	285	300	3500	500	3.7	100.1	41.2	F1	20
12	270	285	300	3500	500	3.8	103.4	45	F1	20
14	250	265	280	3500	500	3.9	106.8	45	F1	20
16	250	265	280	3500	500	4.0	110.2	45	F1	20
18	250	265	280	3200	400	4.1	113.5	45	F1	20
20	220	235	250	3200	400	4.2	116.8	45	F1	20
22	220	235	250	3000	400	4.3	120.1	52.6	F1	20
25	200	215	230	3000	400	4.45	125.1	59.3	F1	20
28	180	190	200	2500	400	4.6	130.1	61.8	F1	20
30	160	170	180	2500	400	4.7	133.4	63.5	F1	20

2 Series/Group

STANDARD PRODUCT DIMENSIONS

BHP2-Q1-D-3-T1-F0

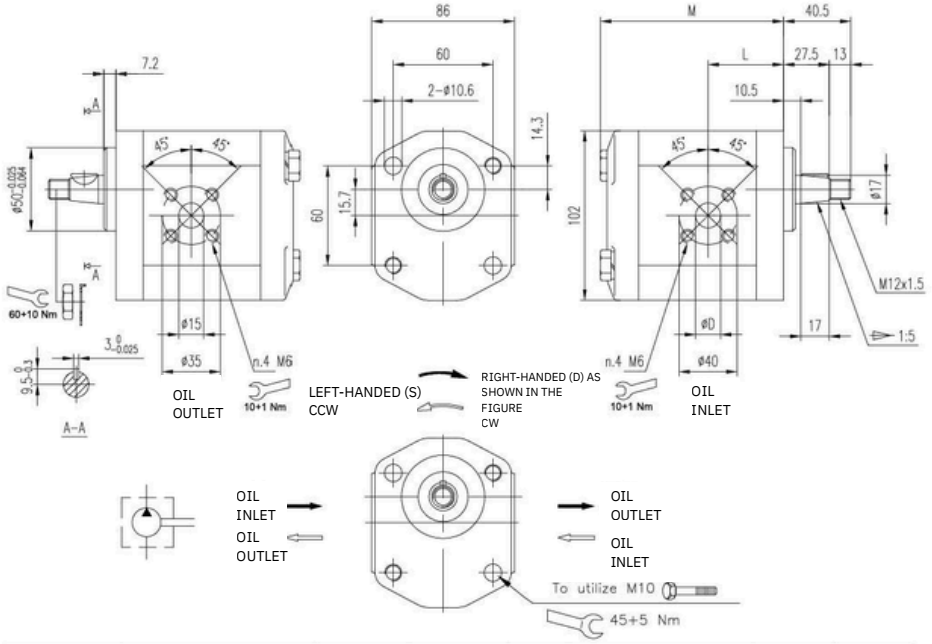

Displacement	Max pressure			Max. speed	Min. speed	Weight	Dimensions		Oil port code	INLET
	P1	P2	P3				M	L		D
(cm³/rev)	bar	bar	bar	(r/min)	(r/min)	Kg	mm	mm		mm
3	270	285	300	4000	800	3.35	88.6	37.4	F0	15
4	270	285	300	4000	600	3.4	90.2	37.4	F0	15
6	270	285	300	4000	600	3.5	93.5	38.6	F0	15
8	270	285	300	3500	500	3.6	96.8	40.7	F0	15
10	270	285	300	3500	500	3.7	100.1	41.2	F1	20
12	270	285	300	3500	500	3.8	103.4	45	F1	20
14	250	265	280	3500	500	3.9	106.8	45	F1	20
16	250	265	280	3500	500	4.0	110.2	45	F1	20
18	250	265	280	3200	400	4.1	113.5	45	F1	20
20	220	235	250	3200	400	4.2	116.8	45	F1	20
22	220	235	250	3000	400	4.3	120.1	52.6	F1	20
25	200	215	230	3000	400	4.45	125.1	59.3	F1	20
28	180	190	200	2500	400	4.6	130.1	61.8	F1	20
30	160	170	180	2500	400	4.7	133.4	63.5	F1	20

STANDARD PRODUCT DIMENSIONS

BHP2-Q2-[D]-[3]-G1-[F0]

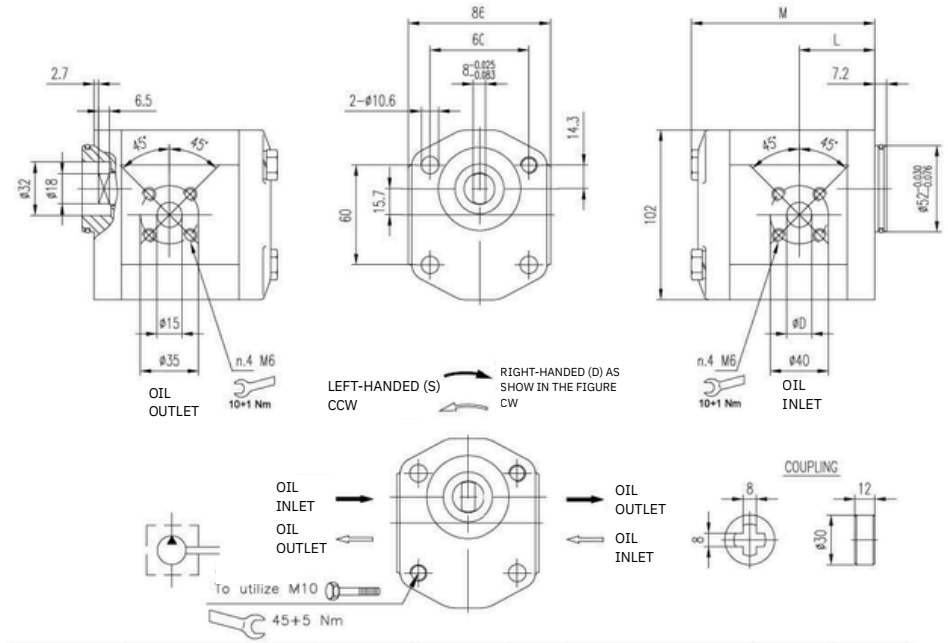

Displacement	Max pressure			Max. speed	Min. speed	Weight	Dimensions		Oil port code	INLET
	P1	P2	P3				M	L		D
(cm³/rev)	bar	bar	bar	(r/min)	(r/min)	Kg	mm	mm		mm
3	270	285	300	4000	800	3.35	88.6	37.4	F0	15
4	270	285	300	4000	600	3.4	90.2	37.4	F0	15
6	270	285	300	4000	600	3.5	93.5	38.6	F0	15
8	270	285	300	3500	500	3.6	96.8	40.7	F0	15
10	270	285	300	3500	500	3.7	100.1	41.2	F1	20
12	270	285	300	3500	500	3.8	103.4	45	F1	20
14	250	265	280	3500	500	3.9	106.8	45	F1	20
16	250	265	280	3500	500	4.0	110.2	45	F1	20
18	250	265	280	3200	400	4.1	113.5	45	F1	20
20	220	235	250	3200	400	4.2	116.8	45	F1	20
22	220	235	250	3000	400	4.3	120.1	52.6	F1	20
25	200	215	230	3000	400	4.45	125.1	59.3	F1	20
28	180	190	200	2500	400	4.6	130.1	61.8	F1	20
30	160	170	180	2500	400	4.7	133.4	63.5	F1	20

2 Series/Group

STANDARD PRODUCT DIMENSIONS

BHP2-A0-[D]-[3]-C0-X-[U0]

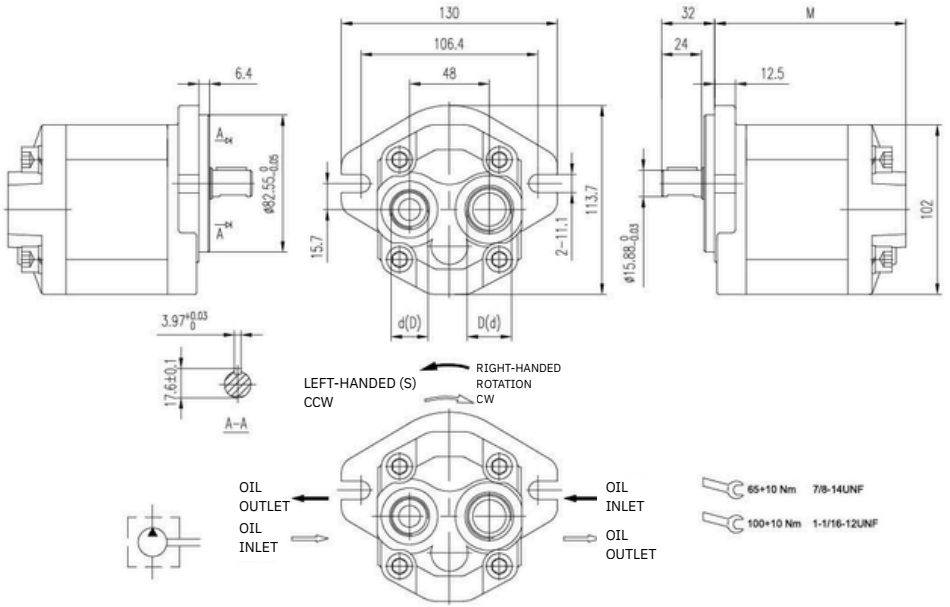

Displacement	Max pressure			Max. speed	Min. speed	Weight	Dimensions	Oil port code	INLET	OUELET
	P1	P2	P3				M		D	d
(cm³/rev)	bar	bar	bar	(r/min)	(r/min)	Kg	mm			
3	270	285	300	4000	800	3.4	103.1	U0	1 1/16-12UNF	7/8-14UNF
4	270	285	300	4000	600	3.45	104.7	U0	1 1/16-12UNF	7/8-14UNF
6	270	285	300	4000	600	3.55	108	U0	1 1/16-12UNF	7/8-14UNF
8	270	285	300	3500	500	3.65	111.3	U0	1 1/16-12UNF	7/8-14UNF
10	270	285	300	3500	500	3.75	114.6	U0	1 1/16-12UNF	7/8-14UNF
12	270	285	300	3500	500	3.85	117.9	U0	1 1/16-12UNF	7/8-14UNF
14	250	265	280	3500	500	3.95	121.3	U0	1 1/16-12UNF	7/8-14UNF
16	250	265	280	3500	500	4.05	124.7	U0	1 1/16-12UNF	7/8-14UNF
18	250	265	280	3200	400	4.15	128	U0	1 1/16-12UNF	7/8-14UNF
20	220	235	250	3200	400	4.25	131.3	U0	1 1/16-12UNF	7/8-14UNF
22	220	235	250	3000	400	4.35	134.6	U0	1 1/16-12UNF	7/8-14UNF
25	200	215	230	3000	400	4.50	139.6	U0	1 1/16-12UNF	7/8-14UNF
28	180	190	200	2500	400	4.65	144.6	U0	1 1/16-12UNF	7/8-14UNF
30	160	170	180	2500	400	4.75	147.9	U0	1 1/16-12UNF	7/8-14UNF

STANDARD PRODUCT DIMENSIONS

BHP2-A0-D-3-S1- UJ4 -HFAC19T-P150-F04

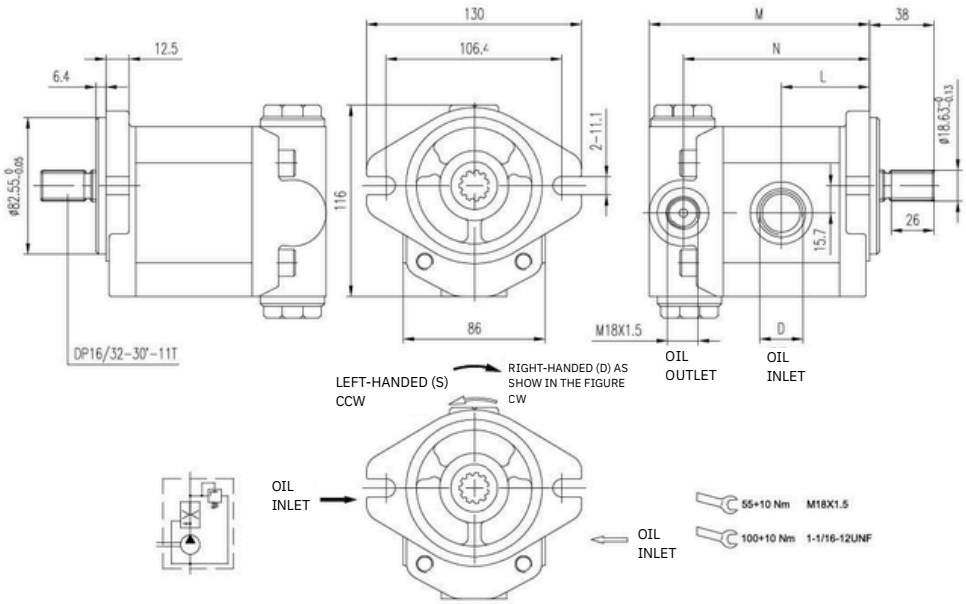

Displacement	Control pressure P1	Control flow Qconst	Max. speed	Min. speed	Weight	Dimensions M	L	N	Oil port code	INLET D
(cm³/rev)	bar	L/min	(r/min)	(r/min)	Kg	mm	mm	mm		
3			4000	800	4.1	113.1	43.6	93.6	UJ4	1 1/16-12UNF
4			4000	600	4.15	114.7	44.4	95.2	UJ4	1 1/16-12UNF
6			4000	600	4.25	118	46	98.5	UJ4	1 1/16-12UNF
8			3500	500	4.35	121.3	47.7	101.8	UJ4	1 1/16-12UNF
10			3500	500	4.45	124.6	49.3	105.1	UJ4	1 1/16-12UNF
12			3500	500	4.55	127.9	51	108.4	UJ4	1 1/16-12UNF
14	100...180	2....30	3500	500	4.65	131.3	52.7	111.8	UJ4	1 1/16-12UNF
16			3500	500	4.75	134.7	54.4	115.2	UJ4	1 1/16-12UNF
18			3200	400	4.35	138	56	118.5	UJ4	1 1/16-12UNF
20			3200	400	4.45	141.3	57.7	121.8	UJ4	1 1/16-12UNF
22			3000	400	4.55	144.6	59.3	125.1	UJ4	1 1/16-12UNF
25			3000	400	4.70	149.6	61.8	130.1	UJ4	1 1/16-12UNF
28			2500	400	4.85	154.6	64.3	135.1	UJ4	1 1/16-12UNF
30			2500	400	5.05	157.9	66	138.4	UJ5	1 5/16-12UNF

2 Series/Group

STANDARD PRODUCT DIMENSIONS

BHM2-A0-R-3-C0-L0-Q1

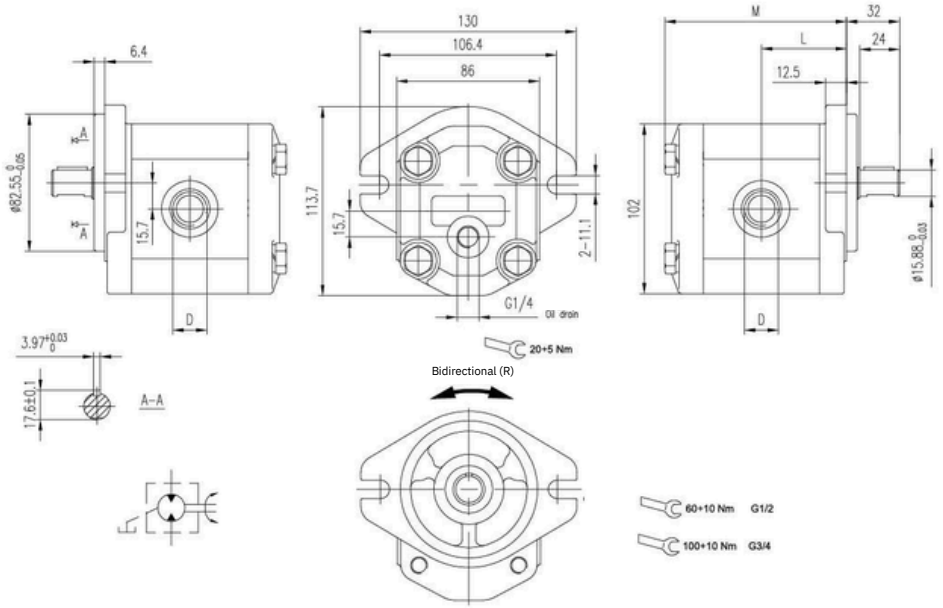

Displacement	Max pressure P1	P2	P3	Max. speed	Min. speed	Weight	Dimensions M	L	Oil port code	Let D
(cm³/rev)	bar	bar	bar	(r/min)	(r/min)	Kg	mm	mm		
3	270	285	300	4000	800	3.35	91.1	43.6	L0	G1/2
4	270	285	300	4000	600	3.4	92.7	44.4	L0	G1/2
6	270	285	300	4000	600	3.5	96	46	L0	G1/2
8	270	285	300	3500	500	3.6	99.3	47.7	L4	G3/4
10	270	285	300	3500	500	3.7	102.6	49.3	L4	G3/4
12	270	285	300	3500	500	3.8	105.9	51	L4	G3/4
14	250	265	280	3500	500	3.9	109.3	52.7	L4	G3/4
16	250	265	280	3500	500	4.0	112.7	54.4	L4	G3/4
18	250	265	280	3200	400	4.1	116	56	L4	G3/4
20	220	235	250	3200	400	4.2	119.3	57.7	L4	G3/4
22	220	235	250	3000	400	4.3	122.6	59.3	L4	G3/4
25	200	215	230	3000	400	4.45	127.6	61.8	L4	G3/4
28	180	190	200	2500	400	4.6	132.6	64.3	L4	G3/4
30	160	170	180	2500	400	4.7	135.9	66	L4	G3/4

STANDARD PRODUCT DIMENSIONS

BAM2-B3-R-[3]-T2-[F13]-Q1-ZC

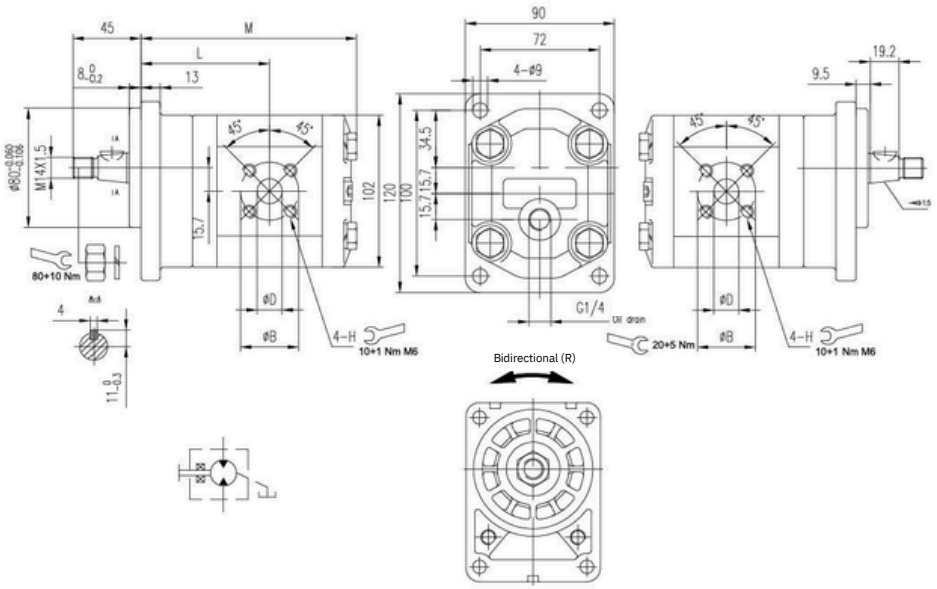

Displacement	Max pressure			Max. speed	Min. speed	Weight	Dimensions		Oil port code	Let		
	P1	P2	P3				M	L		B	D	H
(cm³/rev)	bar	bar	bar	(r/min)	(r/min)	Kg	mm	mm		mm	mm	
3	270	285	300	4000	800	3.35	123.1	75.6	F13	40	20	M6
4	270	285	300	4000	600	3.4	124.7	76.4	F13	40	20	M6
6	270	285	300	4000	600	3.5	128.0	78	F13	40	20	M6
8	270	285	300	3500	500	3.6	131.3	79.7	F13	40	20	M6
10	270	285	300	3500	500	3.7	134.6	81.3	F13	40	20	M6
12	270	285	300	3500	500	3.8	137.9	83	F13	40	20	M6
14	250	265	280	3500	500	3.9	141.3	84.7	F13	40	20	M6
16	250	265	280	3500	500	4.0	144.7	86.4	F13	40	20	M6
18	250	265	280	3200	400	4.1	148	88	F13	40	20	M6
20	220	235	250	3200	400	4.2	151.3	89.7	F13	40	20	M6
22	220	235	250	3000	400	4.3	154.6	91.3	F13	40	20	M6
25	200	215	230	3000	400	4.45	159.6	93.8	F13	40	20	M6
28	180	190	200	2500	400	4.6	164.6	96.3	F13	40	20	M6
30	160	170	180	2500	400	4.7	167.9	98	F13	40	20	M6

2 Series/Group

STANDARD PRODUCT DIMENSIONS

BHP2Y-A0-[D]-[3]-S0-[U0]

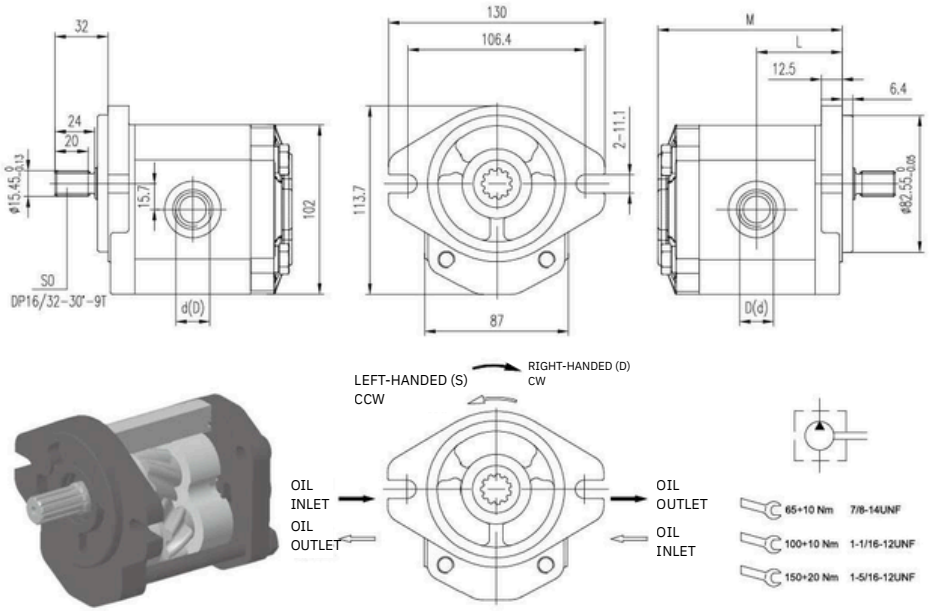

Displacement	Max pressure			Max. speed	Min. speed	Weight	Dimensions		Oil port code	INLET	OUTLET
	P1	P2	P3				M	L		D	d
(cm³/rev)	bar	bar	bar	(r/min)	(r/min)	Kg	mm	mm			
6	270	285	300	4000	600	3.6	97.1	45.6	U0	1 1/16-12UNF	7/8-14UNF
8	270	285	300	3500	500	3.7	100.1	47.1	U0	1 1/16-12UNF	7/8-14UNF
10	270	285	300	3500	500	3.8	103.1	48.6	U0	1 1/16-12UNF	7/8-14UNF
12	270	285	300	3500	500	3.9	106.1	50.1	U0	1 1/16-12UNF	7/8-14UNF
14	250	265	280	3500	500	4.0	109.1	51.6	U0	1 1/16-12UNF	7/8-14UNF
16	250	265	280	3500	500	4.1	111.1	52.6	U0	1 1/16-12UNF	7/8-14UNF
18	250	265	280	3200	400	4.2	114.1	54.1	U0	1 1/16-12UNF	7/8-14UNF
20	220	235	250	3200	400	4.3	119.3	55.7	U0	1 1/16-12UNF	7/8-14UNF
22	220	235	250	3000	400	4.5	120.1	57.1	U0	1 1/16-12UNF	7/8-14UNF
28	180	190	200	2500	400	4.7	129.1	61.6	U0	1 1/16-12UNF	7/8-14UNF